THIS DRAWING IS UNPUBLISHED. RELEASED FOR PUBLICATION -.-
© COPYRIGHT - BY TYCO ELECTRONICS CORPORATION. ALL RIGHTS RESERVED.

LOC	DIST
GP	00

REVISIONS

P	LTR	DESCRIPTION	DATE	DWN	APVD
	K	REVISED PER ECO-06-026525	21/NOV/06	ZR	WM

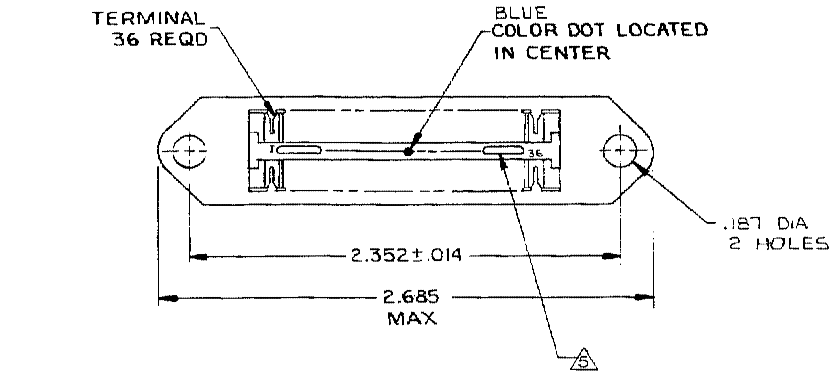

1. THE CONTACT SURFACES OF THE TERMINALS ARE COATED WITH LUBRICANT.
2. ALL DIMENSIONS SHOWN ARE FOR REFERENCE ONLY UNLESS OTHERWISE SPECIFIED.
3. MATERIAL:
   HOUSING – THERMOPLASTIC (BLACK)
   TERMINALS: – HIGH STRENGTH COPPER ALLOY PLATED WITH .000030 MIN GOLD OR GOLD FLASH OVER .000030 MIN PALLADIUM NICKEL ON CONTACT MATING SURFACE. .000050 MIN NICKEL UNDERPLATE OVER ENTIRE TERMINAL.
4. WIRE SIZE: 24 & 26 AWG SOLID & 24 AWG 7 STRANDS OF COPPER CONDUCTORS. MAX INSULATION DIAMETER OF .045 IS ACCEPTABLE FOR MOST APPLICATIONS.
5. CORING MAY OR MAY NOT APPEAR AND IS AT THE DISCRETION OF TYCO ELECTRONICS.

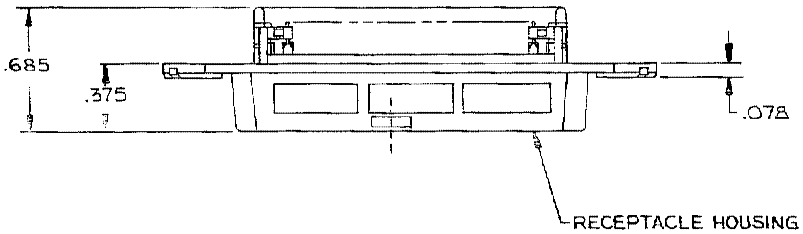

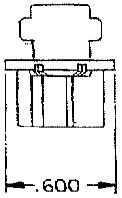

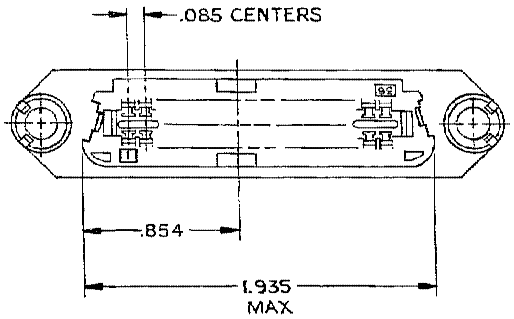

552275

THIN FLANGE	2-552275-1
DESCRIPTION	PART NO

THIS DRAWING IS A CONTROLLED DOCUMENT.

DIMENSIONS: INCHES

TOLERANCES UNLESS OTHERWISE SPECIFIED:
0 PLC ± –
1 PLC ± –
2 PLC ± –
3 PLC ± –
4 PLC ± –
ANGLES ± –

MATERIAL 3
FINISH 3

DWN STEPHEN DOSS 12-27-79
CHK M.D.FRIEL 12-31-79
APVD S. HEGE 1-2-80
PRODUCT SPEC –
APPLICATION SPEC –
WEIGHT –

tyco Electronics
Tyco Electronics Corporation
Harrisburg, PA 17105-3608

NAME
ASSY, RCTP, 36 POSN, B SLOT
CHAMP-LOK W/ .187 DIA HOLES

SIZE	CAGE CODE	DRAWING NO	RESTRICTED TO
A2	00779	C-552275	–

CUSTOMER DRAWING | SCALE NTS | SHEET 1 OF 1 | REV K